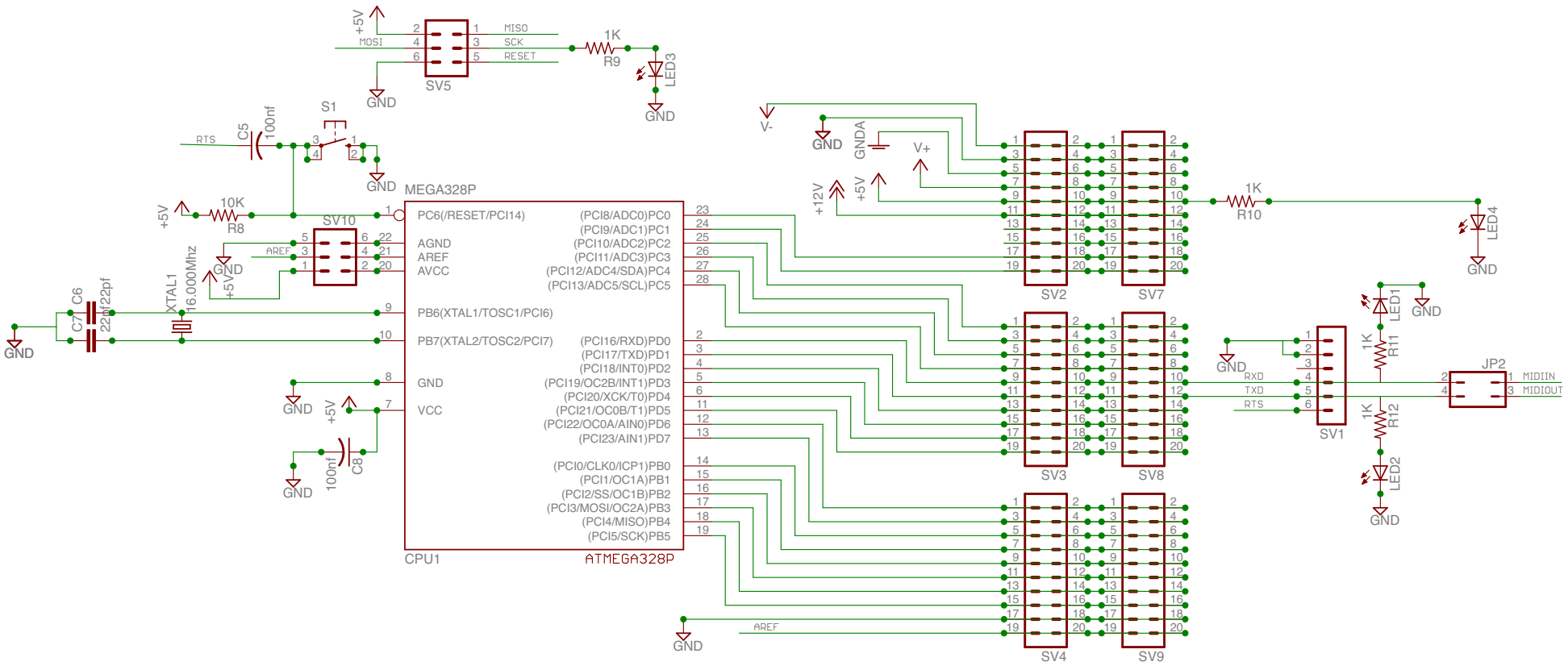
SV5
MISO
SCK
RESET
MOSI
+5V
GND
1K
R9
LED3
S1
C5
100nf
RTS
10K
R8
SV10
AREF
XTAL1
16.000Mhz
C6
C7
22pf
MEGA328P
PC6(/RESET/PCI14)
AGND
AREF
AVCC
PB6(XTAL1/TOSC1/PCI6)
PB7(XTAL2/TOSC2/PCI7)
GND
VCC
(PCI8/ADC0)PC0
(PCI9/ADC1)PC1
(PCI10/ADC2)PC2
(PCI11/ADC3)PC3
(PCI12/ADC4/SDA)PC4
(PCI13/ADC5/SCL)PC5
(PCI16/RXD)PD0
(PCI17/TXD)PD1
(PCI18/INT0)PD2
(PCI19/OC2B/INT1)PD3
(PCI20/XCK/T0)PD4
(PCI21/OC0B/T1)PD5
(PCI22/OC0A/AIN0)PD6
(PCI23/AIN1)PD7
(PCI0/CLK0/ICP1)PB0
(PCI1/OC1A)PB1
(PCI2/SS/OC1B)PB2
(PCI3/MOSI/OC2A)PB3
(PCI4/MISO)PB4
(PCI5/SCK)PB5
CPU1
ATMEGA328P
C8
100nf
V-
GNDA
V+
+12V
SV2
SV7
SV3
SV8
SV4
SV9
1K
R10
LED4
LED1
LED2
R11
R12
SV1
RXD
TXD
RTS
JP2
MIDIIN
MIDIOUT

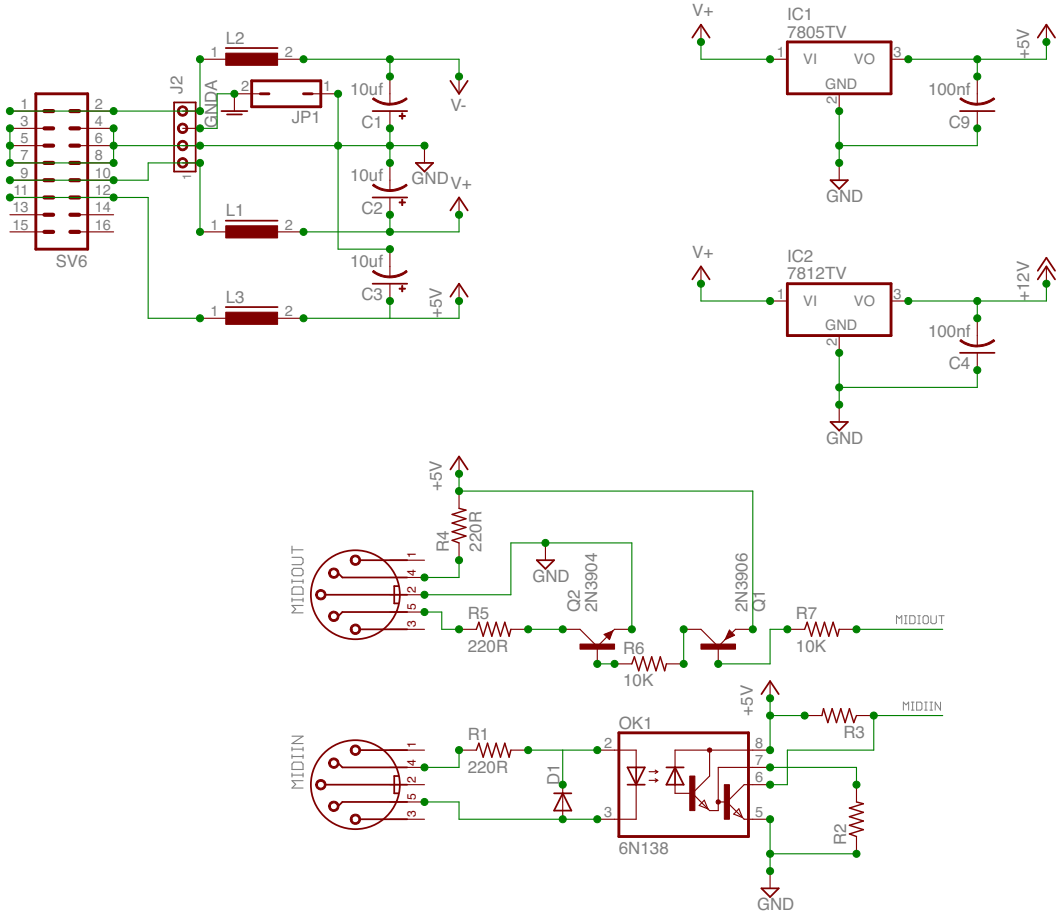
SV6
J2
GNDA
L2
L1
L3
JP1
10uf
C1
C2
C3
GND
V-
V+
+5V
IC1
7805TV
VI
VO
GND
100nf
C9
IC2
7812TV
+12V
C4
R4
220R
R5
220R
Q2
2N3904
R6
10K
2N3906
Q1
R7
10K
MIDIOUT
MIDIIN
R1
220R
D1
OK1
6N138
R3
R2