nonlinearcircuits

A Plague of Demons: Thru-0 VCO

UPDATED: 15 JUNE 2017

This VCO uses analogue switches to achieve the thru 0 function, based on ideas presented in Electronotes EN#75 which were in turn based on suggestions by Bob Moog.

Pictures showing assembly can be found here:

http://nonlinearcircuits.blogspot.com.au/2017/05/plague-of-demons-thru0-vco.html

The FREQ pot is a fine tune pot to set the module up for phase reversal, the LEDs indicate when this happens.

If nothing is patched into the CV INPUT, the CV pot functions as a tuning pot to set the module up for higher frequency operation. Once a CV signal is patched in, the pot becomes an attenuator and the signal is summed with the signal from the 1V/OCT jack. This only happens if you install the "optional" 10k resistor on the bottom PCB, I suggest you **do** install it.

SELF CONTROL allows the sine output signal to be fed back into the Frequency modulation sub-circuit, the DEPTH control will need to be turned up for this to have an effect, or (better) use a CV on the FM ENV input.

SAW and PULSE are both controlled by the PW pot and PWM input. PULSE will have its width varied, SAW will become chopped and morph into a complex, harmonically rich waveform eventually its frequency will double.

Ignore the 'Sine' and 'cosine' markings on the PCBs; these were from an earlier prototype where I intended to tap different parts of the circuit to get these. In the end it was far simpler to just have sine and its inverted form.

If you want to increase the amplitude of the Tri and Saw signals, change R70 and R64 respectively, try 120k, 150k or 180k.

Version 1 & 2 Top PCBs can benefit from a small mod to remove the slight glitch that occurs when the signal goes slowly thru zero. See details after the BOM, the components required have been added to the BOM. This is not a critical mod, but worth doing.

Version 1 & 2 Bottom PCBs have a trace missing and need a wire added, see pic:

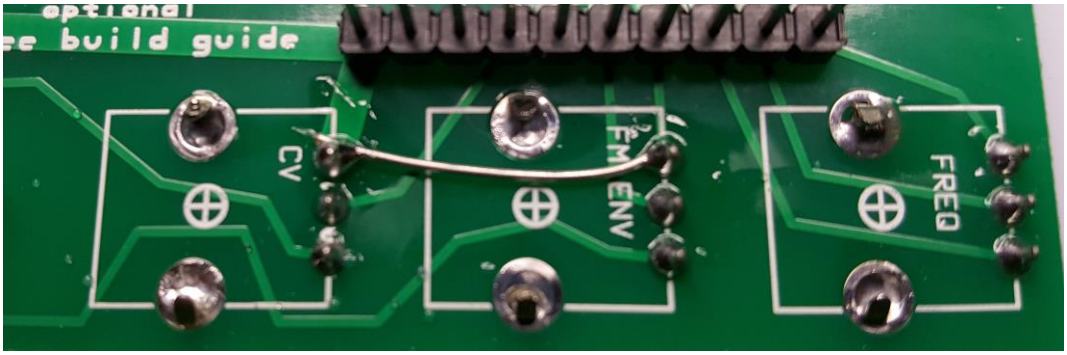

It is best to add this wire after installing the pots, just use a clipping from a LED or something.

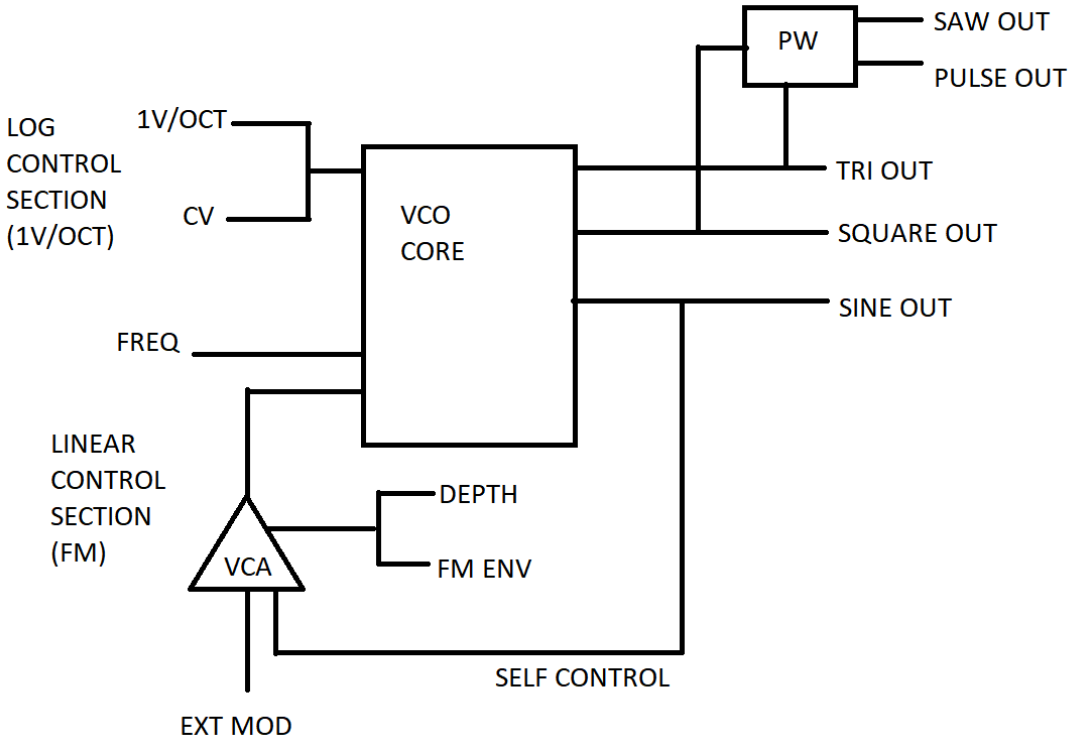

Functional Block Diagram

BOM

Capacitors should have a minimum 25V rating though 50V is preferable (most at Tayda are 50V).

10uF will only be available with 25V or 35V ratings.

Component number	Component	Notes
C1	100p	0805
C2	1n	0805 **OR** thru-hole (NOT BOTH). This is the timing cap, use a good one.
C3	1u	0805
C4	100p	0805
C5, C6, C7	10uF 25V (or 35V)	0805 Mouser: 963-TMK212BBJ106MG-T
C8, C9, C10, C11, C12, C13	100nF	0805
D1	LL4148	Mouser: 512-LL4148
D2	LL4148	
D3	LL4148	
D4	LL4148	
D5, D6	S1JL or similar	Mouser: 821-S1JL
D7	LL4148	
D8	LL4148	
Q1	BCM857DS	SOT23-6 or SOT457 Mouser: 771-BCM857DS-T/R
Q2	BC857	SOT23 Tayda: A-1345
Q3	MMBFJ108 or similar	SOT23 Mouser: 512-MMBFJ108
R1	100k	0805
R2	100k	0805
R3	91k	0805
R4	33k	0805
R5	56k	0805
R6	1k Tempco	thru-hole. Soldered across Q1, add heatsink
R7	10k	0805
R8	1M5	0805
R9	1M5	0805
R10	100k	0805
R11	100k	0805
R12	100k	0805
R13	120k	0805
R14	100k	0805
R15	100k	0805
R16	100k	0805
R17	100k	0805
R18	100k	0805
R19	100k	0805
R20	100k	0805
R21	100k	0805
R22	100k	0805
R23	390R	0805
R24	390R	0805
R25	100k	0805
R26	100k	0805
R27	10k	0805
R28	10k	0805
R29	33k	0805

R30	9k1	0805
R31	10k(RL)	0805 select for LED brightness
R32	51k	0805
R33	2k2	0805
R34	100k	0805
R35	1M	0805
R36	220k	0805
R37	51k	0805
R38	1k	0805
R39	100k	0805
R40	100k	0805
R41	1k	0805
R42	47k	0805
R43	47k	0805
R44	470R	0805
R45	12k	0805
R46	220k	0805
R47	30k	0805
R48	47k	0805
R49	100k	0805
R50	1k	0805
R51	10k	0805
R52	2k2	0805
R53	2k2	0805
R54	100k	0805
R55	51k	0805
R56	300k	0805
R57	47k	0805
R58	150k	0805
R59	1M	0805
R60	22k	0805
R61	2k2	0805
R62	2k2	0805
R63	100k	0805
R64	100k	0805
R65	1k	0805
R66	100k	0805
R67	100k	0805
R68	10k	0805
R69	470R	0805
R70	180k	0805
R71 (resistor for mod)	2M2	0805
R72 (resistor for mod)	10k	0805
One resistor on BOTTOM PCB	10k	0805
U1, U2, U3, U8, U9, U10, U11, U12	TL072	soic
U4, U5	DG202 or DG212 or DG412	soic DG412 has fastest switching times Mouser: 781-DG412DY-T1-E3
U6, U7	LM13700	soic

QUANTITY	**COMPONENT**	**NOTES**
1	trimpot multi-turn 20k	Tayda: A-592
1	trimpot multi-turn 100k	Tayda: A-587
1	trimpot 100k	Tayda: A-2506
8	panel pot 100k	Tayda: A-1848
11	3.5mm jacks (Kobiconn style)	Tayda: A-865 or Modular Addict: PJ301M-12

2	**3mm** LEDs	get superbrights
3	10 Pin 2.54mm Single Row Pin Header Strip	Tayda: A-197
3	10 Pin 2.54mm Single Row Female Pin Header	Tayda: A-1306
1	Eurorack 10 pin power connector	Tayda: A-198

Passives (gets spares)

COMPONENT	QUANTITY	COMPONENT	QUANTITY	COMPONENT	QUANTITY	COMPONENT	QUANTITY
100k	25	1M	2	300k	1	9k1	1
10k	8	1M5	2	33k	2	91k	1
1k	4	2k2	5	390R	2	100pF	2
12k	1	22k	1	470R	2	1nF	1
120k	1	220k	2	47k	4	100nF	6
150k	1	2M2	1	51k	3	1uF	1
180k	1	30k	1	56k	1	10uF	2

Setup:

20k trimpot is for 1V/oct tuning. There are lots of different methods to tune VCOs, google it and determine your favourite. For me a Korg instrument tuner and accurate voltage source (Fluke Instrument Calibrator) does the job.

100k Multi-turn is to get a nice sinewave, best to use a scope for this.

100k SAW trimpot is to set the range for the sawtooth modulation. Again, a scope is best, I just set it so there is a regular clean sawtooth when the PW pot is at 0 or 10.

Mod to remove glitch at zero crossing (PCB versions 1 & 2 only)

This mod requires 1 trace to be cut and 2 resistors added, it is easiest to cut the trace before soldering components onto the PCB, but add the two resistor AFTER you have soldered on the other components.

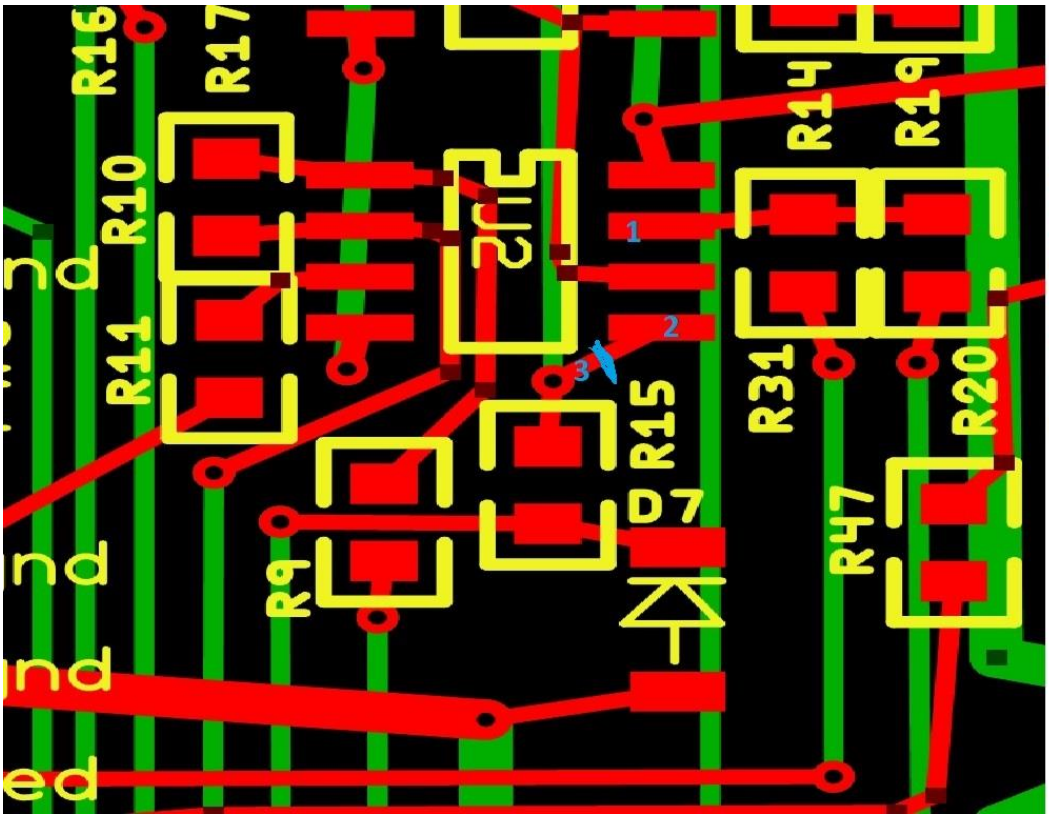

A. cut the trace at 3
B. Solder 10k resistor between the upper pad of R15 and pin 5 (numbered 2 in picture)
C. Solder 2M2 resistor between pins 5 and 7 (numbered 1 & 2 in the picture). be sure it does not touch pin 6.

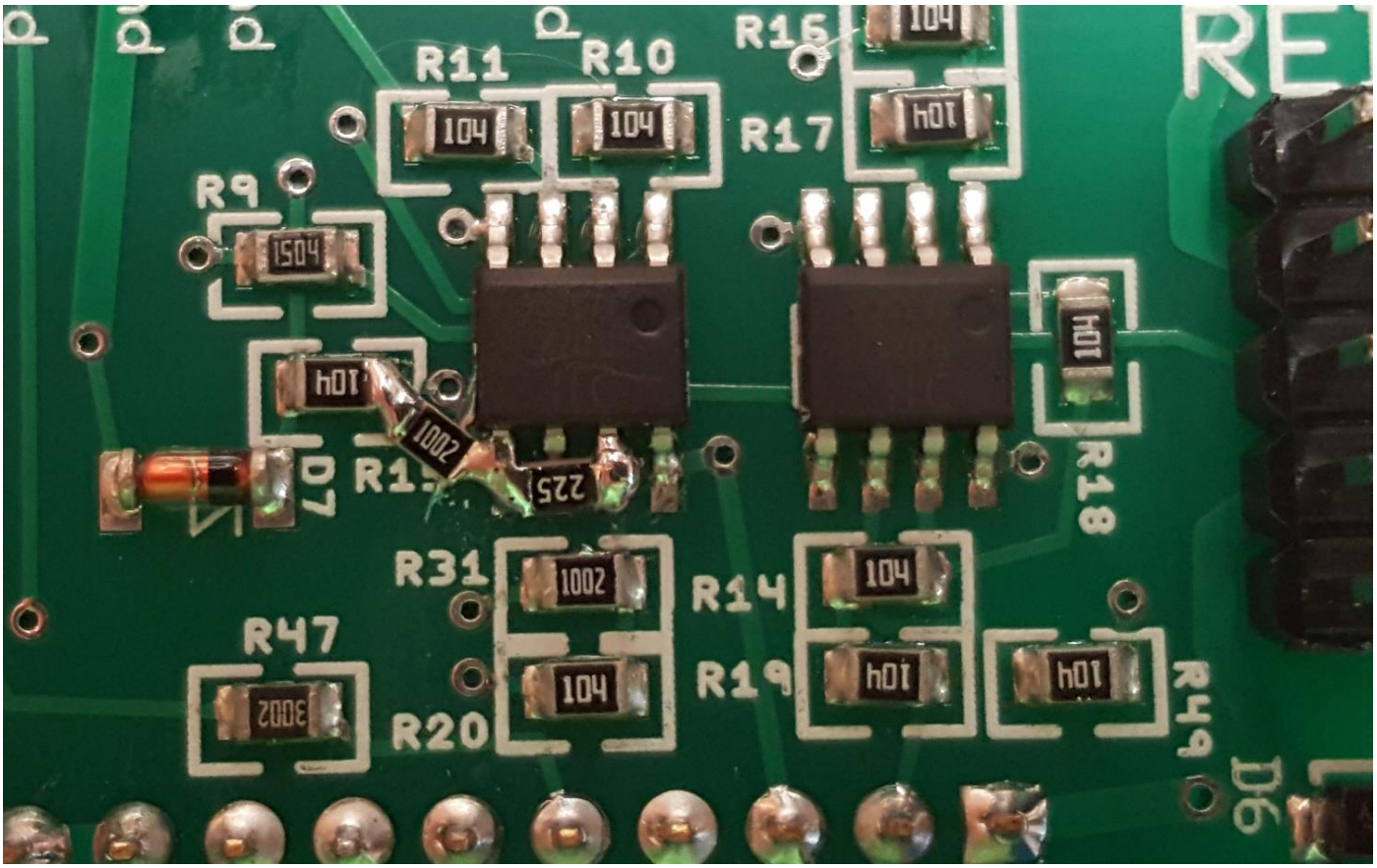

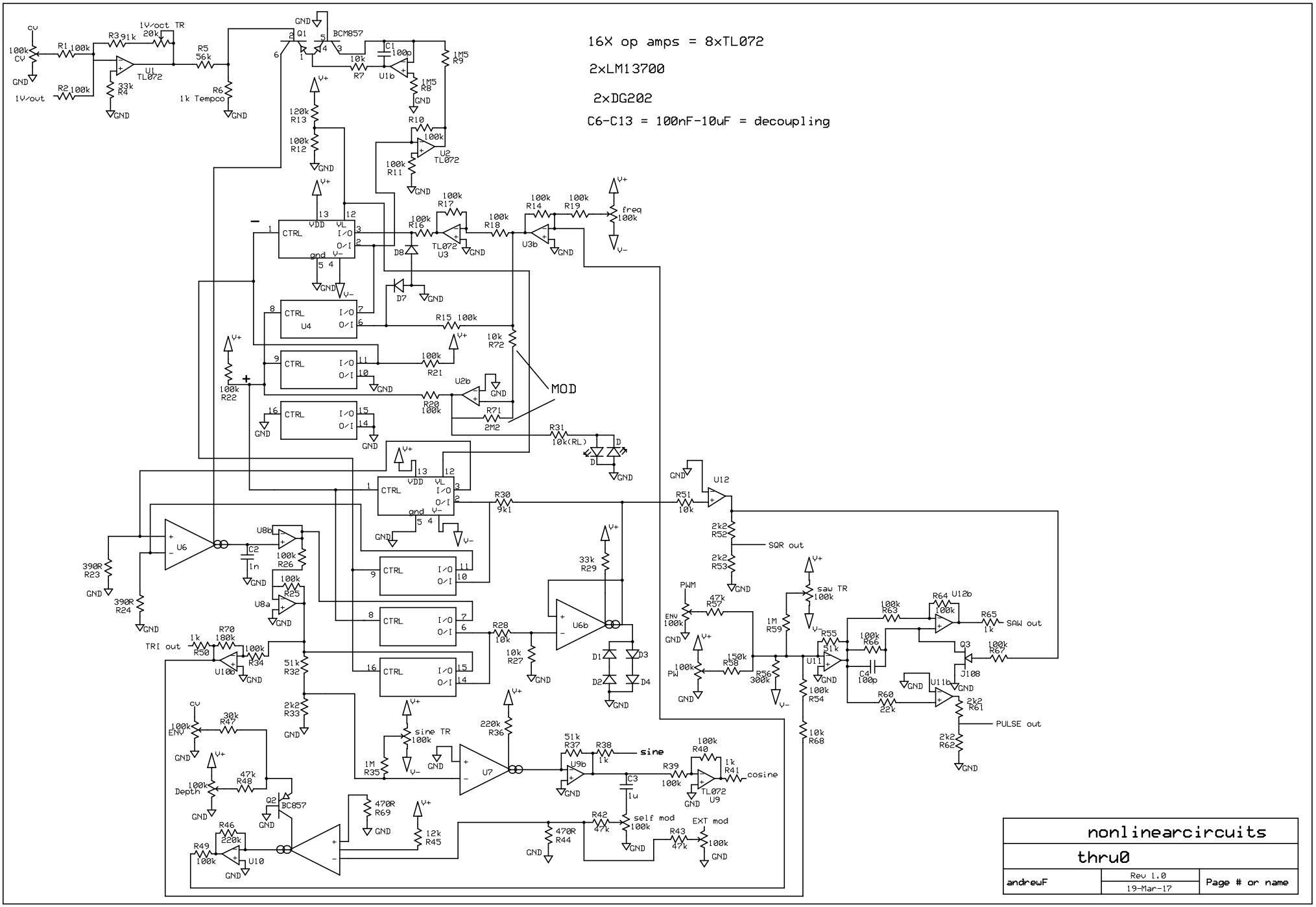
16X op amps = 8xTL072
2xLM13700
2xDG202
C6-C13 = 100nF-10uF = decoupling
CV
1V/out
1V/oct TR
R5 56k
R6 1k Tempco
Q1 BCM857
U1 TL072
U2 TL072
U3 TL072
U9 TL072
U10
U11
U12
U6
U7
U8a
U8b
U9b
U6b
U2b
U3b
U11b
U12b
CTRL
U4
MOD
freq 100k
SQR out
SAW out
PULSE out
TRI out
sine
cosine
sine TR 100k
saw TR 100k
PWM
ENV 100k
PW 100k
Depth 100k
self mod 100k
EXT mod
Q2 BC857
Q3 J108
nonlinearcircuits
thru0
andrewF
Rev 1.0
19-Mar-17
Page # or name

Some component numbers (yes I know; R27 and R41) may be difficult to read on the PCB, use these images to confirm:

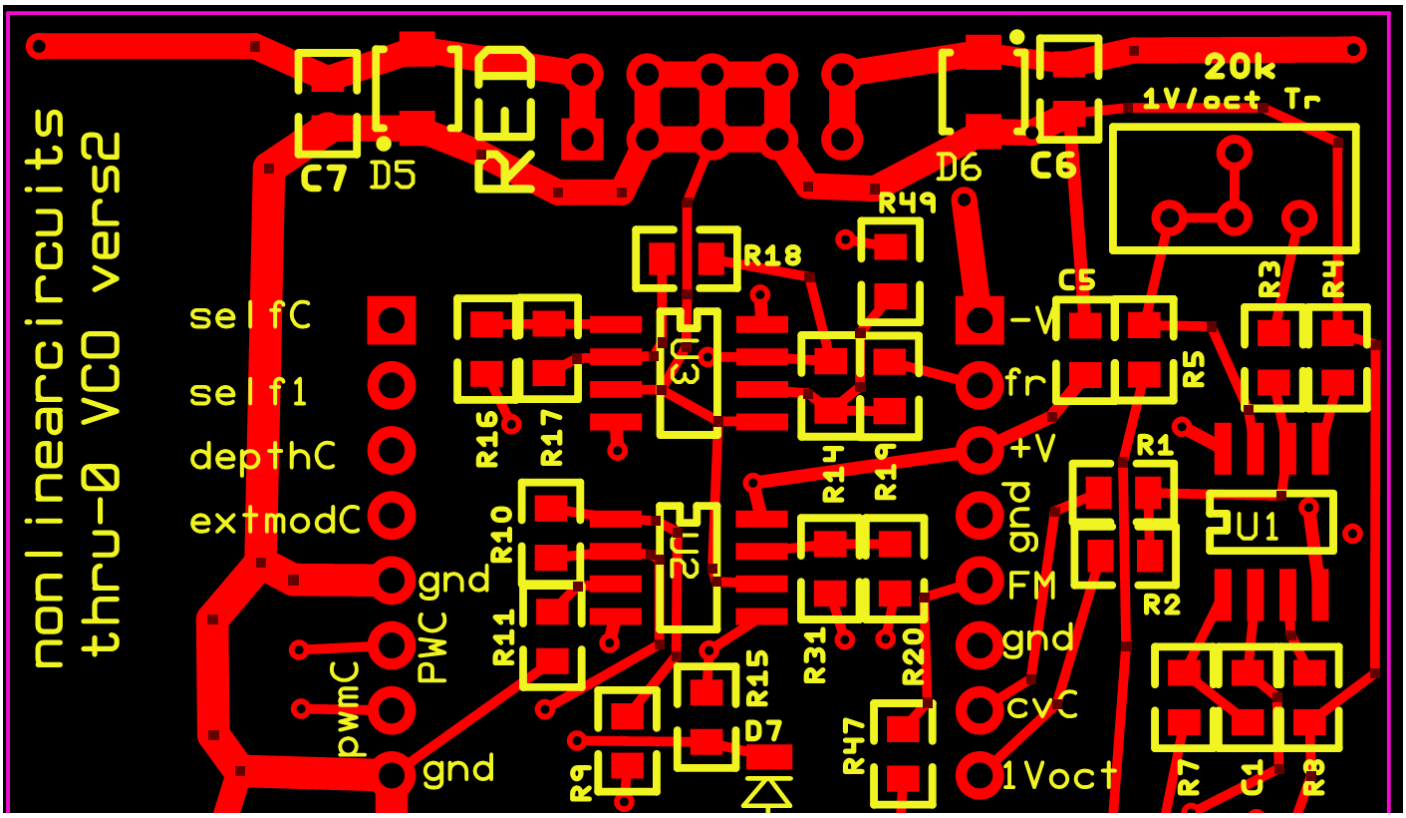

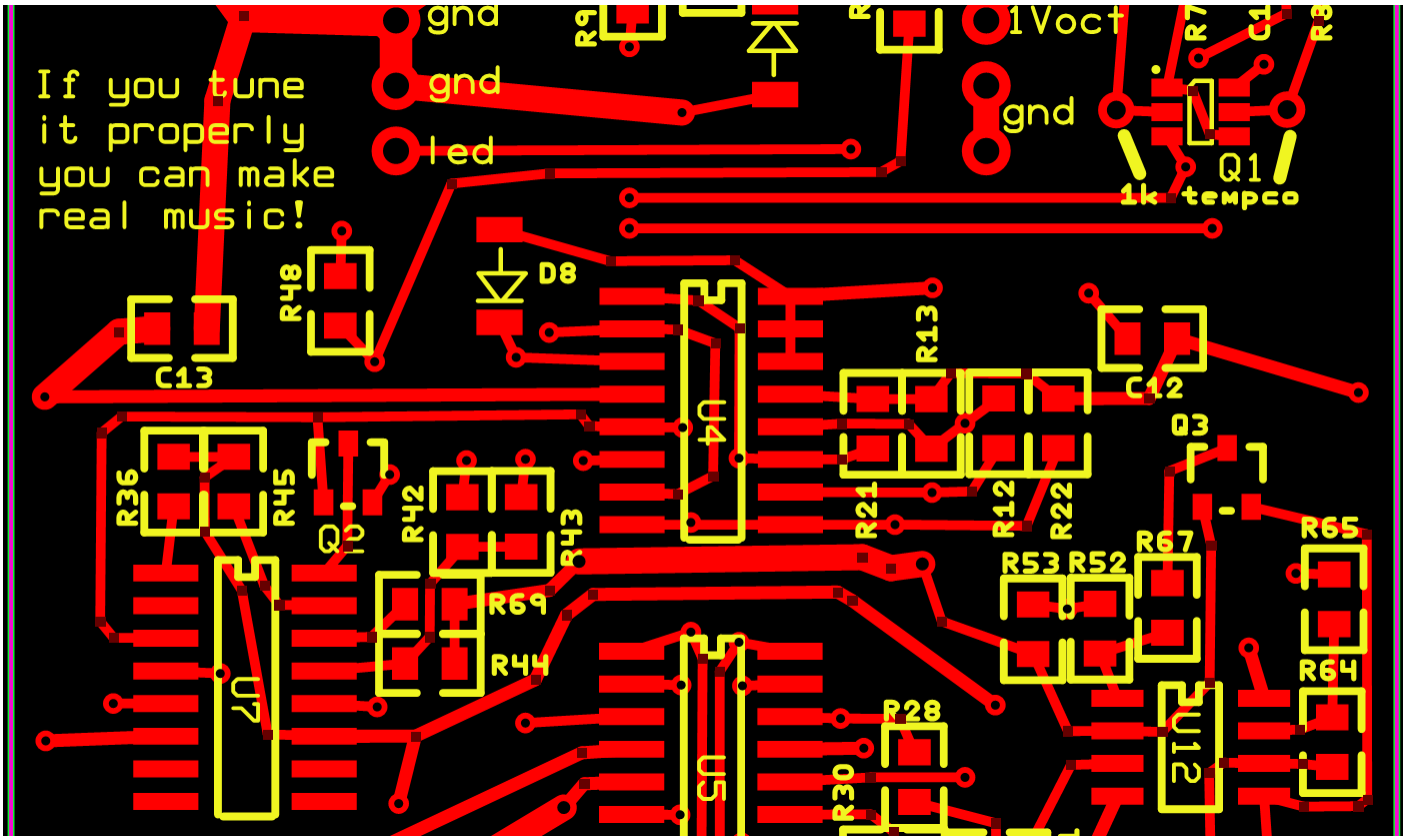

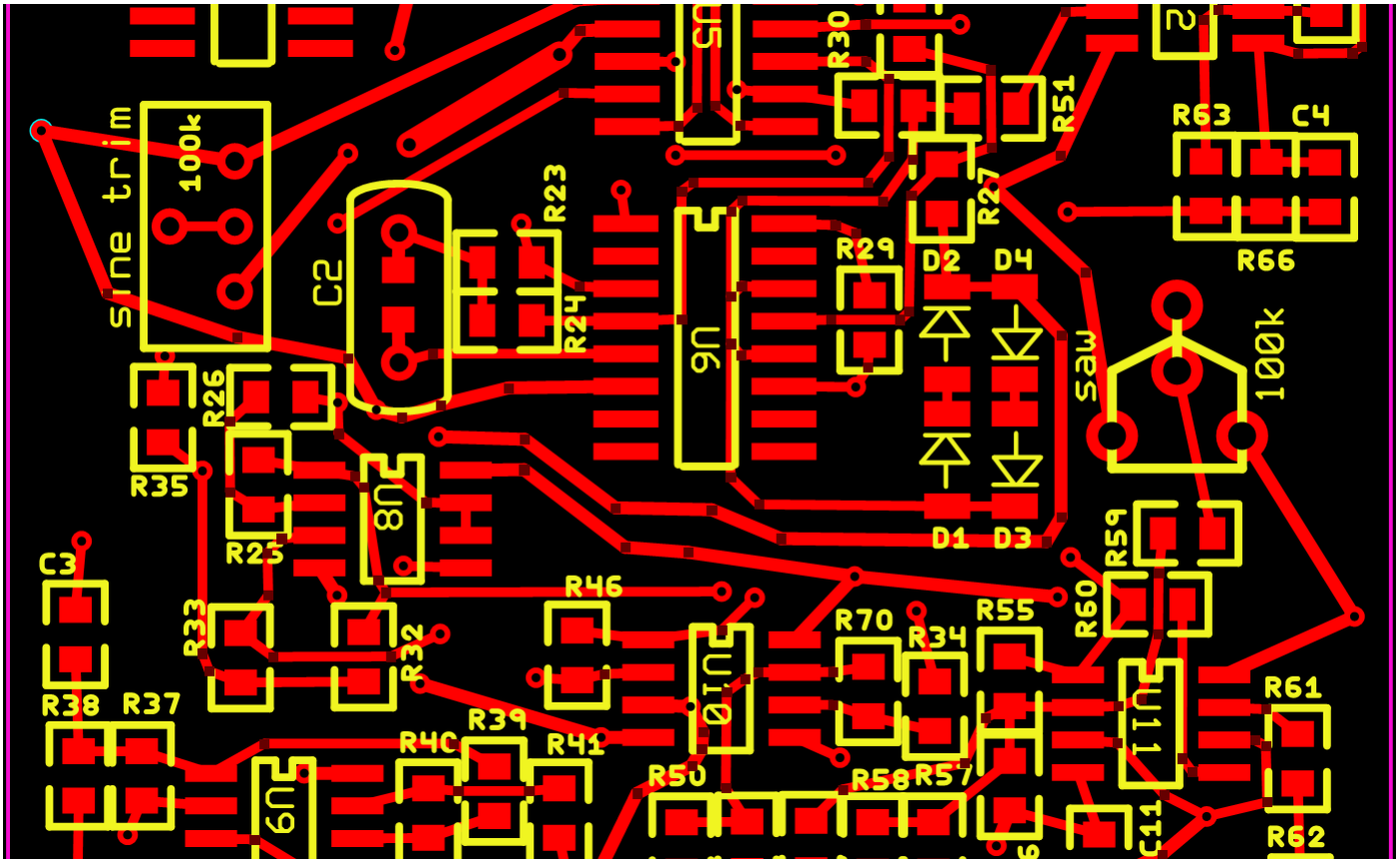
sine trim
100k
C2
R23
R24
R26
R35
R25
U8
C3
R33
R32
R46
R38
R37
R39
R40
R41
U9
U10
R50
R58
R57
R70
R34
R55
R60
R59
U11
C11
R61
R62
R29
D2
D4
D1
D3
R27
R51
R30
saw
100k
R63
C4
R66

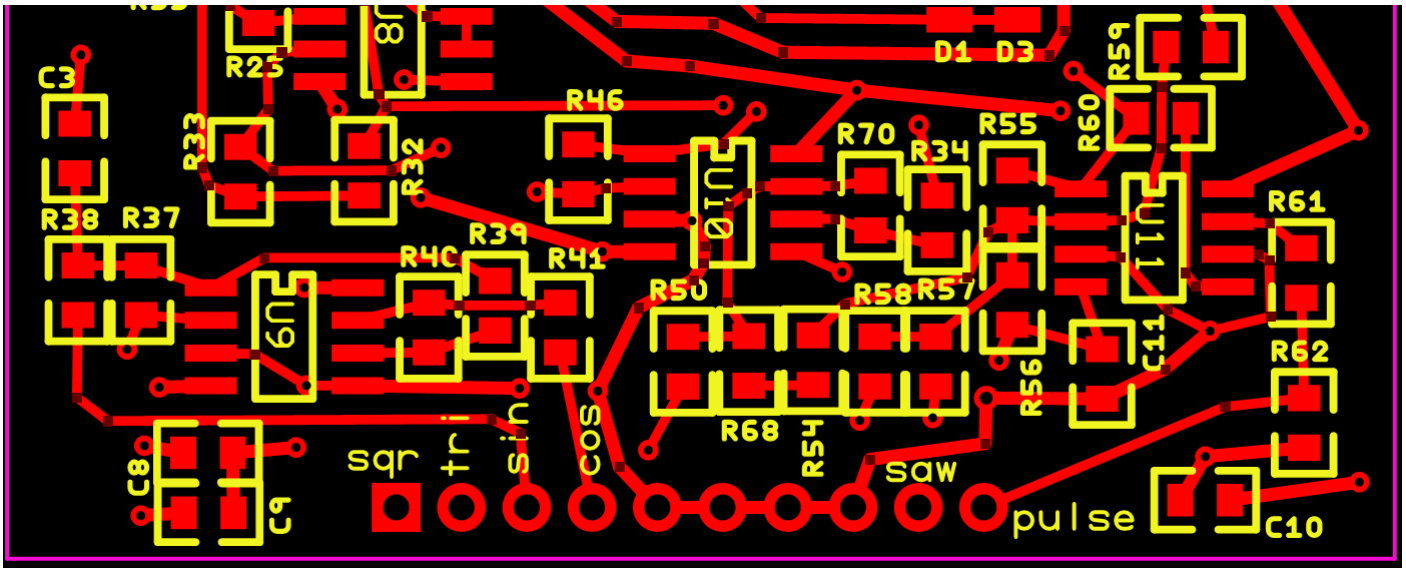
C3
R23
U8
R33
R32
R46
R38
R37
R39
R40
R41
U9
U10
R50
R58
R57
R70
R34
R55
R60
R59
D1
D3
U11
C11
R61
R62
R56
R68
R54
C8
C9
sqr
tri
sin
cos
saw
pulse
C10