ARSEq build notes

Nonlinearcircuits

Info - http://www.sdiy.org/pinky/data/arseq.html

This circuit is quite simple but an excellent envelope generator.
It has a counter, four attack release generators (ARgen) and a mixer.
It was originally intended to be a sequencer with controllable slew on each stage,
but it only took an extra pot and two diodes on each stage to turn it into what it is now.
The ARgen circuit is pretty common; I have seen dozens of variations around the net and in books.
Most likely it evolved from the old diode function generators of analogue computer days.

Each stage takes two clock signals, the 1st starts the attack slope.
If the slope is steep enough the output will reach the sustain value set by the level pot for that stage.
The next clock signal puts that stage into release mode and the output starts to drop.
The 3rd clock signal starts the attack on the next stage, if the previous is still 'releasing'
the signals from each stage will sum in the output mixer. Better to check the demos on the above link.

LEDs indicate the envelope of each stage, so more than one LED may be lit at once,
indicating the output signal is a mix of two or maybe more stages.

There is a trimpot to offset the output voltage so that it returns to 0V, or close to it anyway.
This type of ARgen doesn't quite make it back to 0V due to the diode forward voltage. I didn't use put one on my PCB, but it is there if you want it.

The PCB have holes for adding wires to get a gate output for each stage,
builders will have to add resistors on the panel for this, details follow...

***Chips** – two TL074, one 4017*

*Four **Transistors** – all NPN, I use BC547, any general purpose trannie will do*

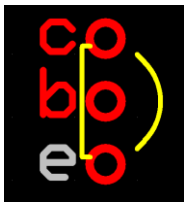

fig.1

Looking at the PCB the pinout is as shown in fig.1

There is one 10nF cap, the rest of the unmarked caps are for decoupling, use 47nF to 100nF with 2.5mm spacing. I use these ones from Futurlec:

C100UC 0.1uF 50V Ceramic Capacitors

Or (cheaper)

C047UC 0.047uF 50V Ceramic Capacitors

The rest of the caps are electros, the two near the power connector are for decoupling, 10uF 25V-50V will suit.
For the other four electros, these are for the AR generators, I used 10uF, but anything from 1uF to 10uF will do….the larger the value the longer and slower the envelopes ….and less precision from the pots.

Unmarked SMD resistors are 1206 sized 100k.
Thru-hole resistors are all 1k, 10k and 100k.

Diodes are regular signal diodes (1N4148), the direction is a little difficult to see on the PCB See fig.2

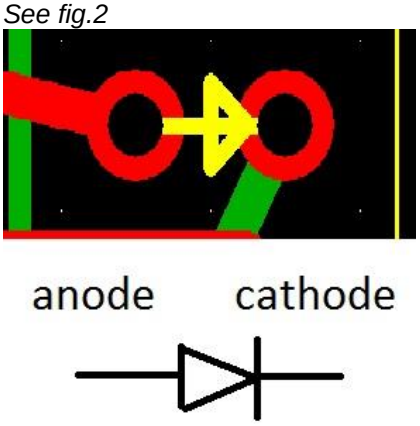

fig.2

For your panel*, the 6 pots are spaced 1 inch apart. And the columns are 1 inch apart.*

ERROR ON PCB #1 The markings for LEDs 3 & 4 have been swapped over, The circuit is fine just the labelling is wrong, so put LED 3 where LED 4 is meant to go, etc!

ERROR ON PCB #2 – The label below pot F3 states "pots 100k" - really the pot values are optional.

I use 1MA and 100kB pots from Song Huei - R0903N-B100k, L-25KC (the 25 is the length L).

It seems a pretty common footprint. Another pot that fits is this Alpha from Altronics - http://www.altronics.com.au/index.asp?area=item&id=R1948

You should find similar types from Mouser, Rapid, etc.

For my build, I used 1MA pots for the R and F (Rise & Fall) positions and 100kB for the "lvl" (level) positions.

Probably, 1M pots with 10uF caps are overkill. Good if you want really really slow envelopes but hard to dial in short to mid-range envelopes. If using 10uF caps, 100k pots will be fine for everything. If using 1uF caps, 1M pots will be better for the **R**ise and **F**all pots…..this is up to the builder.

OPTIONAL COMPONENTS

OFFSET

Just above the power connector, there is a trimpot and resistor labelled "100k?", on the other side of the PCB are two SMD 100k resistors marked "opt".

These four components enable a voltage offset to be applied to the output signal. The types of AR

generators used in this circuit don't always get back to 0V in a hurry thanks to the diodes, so the trimpot can be adjusted to make this happen. Use a 10k to 100k trimpot.

I didn't install these on my board, again, it is up to the builder. Just leave the spaces blank if you don't care about a little bit of offset.

LED resistors

There are four resistors marked "L1k", these set the brightness of your LEDs. My LEDs like 1k but adjust these for the LEDs you want to install.

Gate outputs

Close to each of the "L1k" resistors, there are holes marked "1, 2, 3, 4" These can be used to obtain a gate signal for each stage. ***Do not wire these directly to the panel****, use two resistors as a voltage divider as shown in fig.3. There is no space for these resistors on the PCB, you will have to wire them directly to the sockets.*

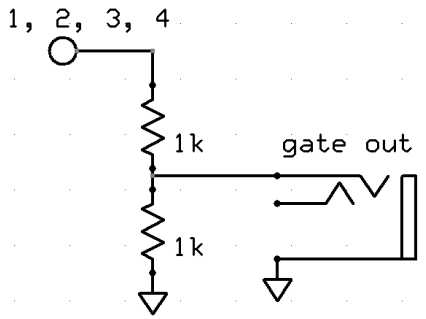

fig.3

On a +/-12V supply the two 1k resistors will give an approx. 6V gate.

*100k**

Near pins 8 & 9 of TL074b is a resistor labelled 100k, this can be adjusted to change the gain of the output signals. 100k gives -1X gain. Smaller values reduce the gain. As there are level pots on each stage and you can adjust the output levels with these anyway, the easiest solution is don't think too much and just install 100k here.*

WIRING

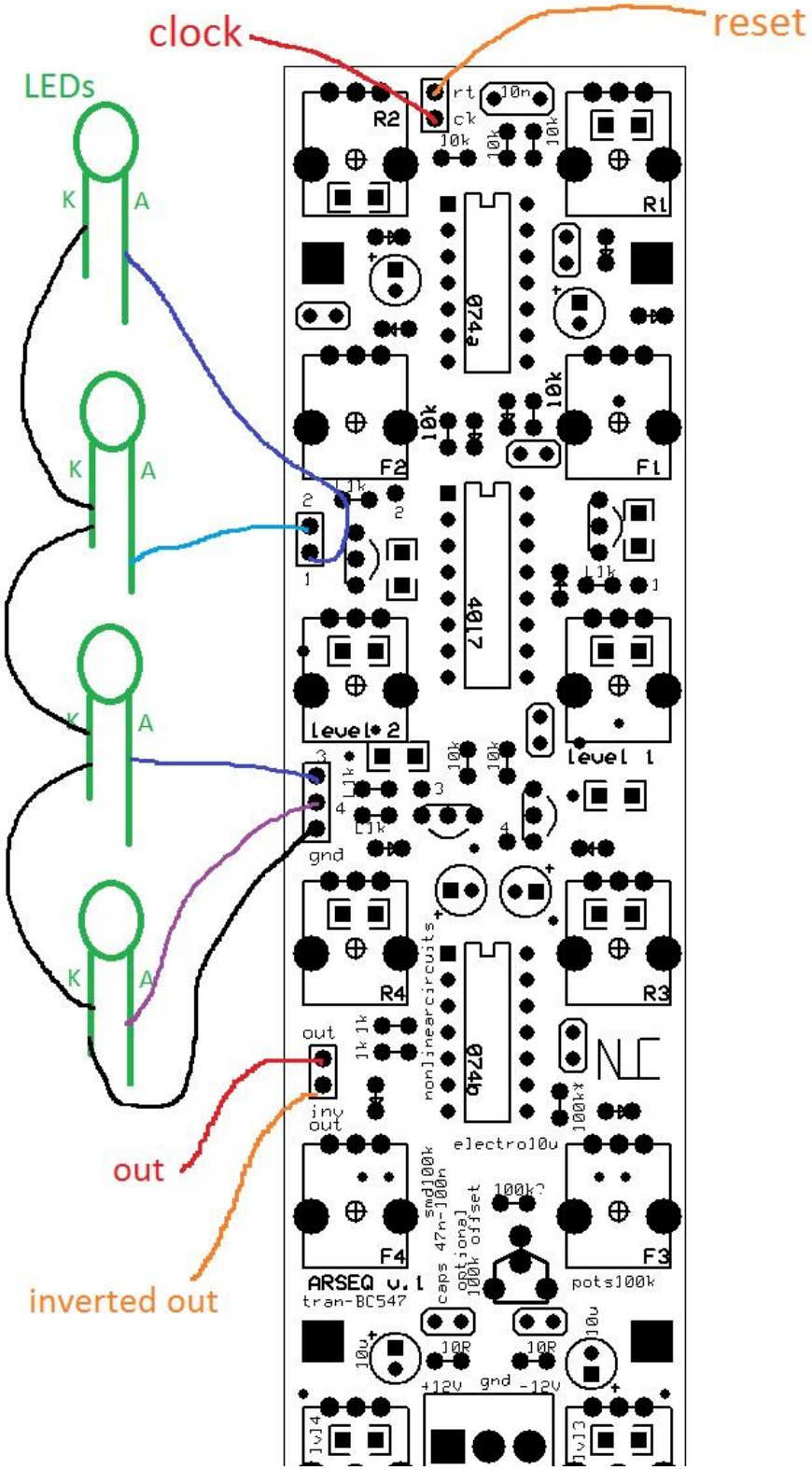
clock
reset
LEDs
K
A
out
inverted out
rt
ck
R2
R1
F2
F1
level 2
level 1
gnd
R4
R3
out
inv
out
F4
F3
ARSEQ v.1
tran-BC547
pots100k
+12V
gnd
-12V

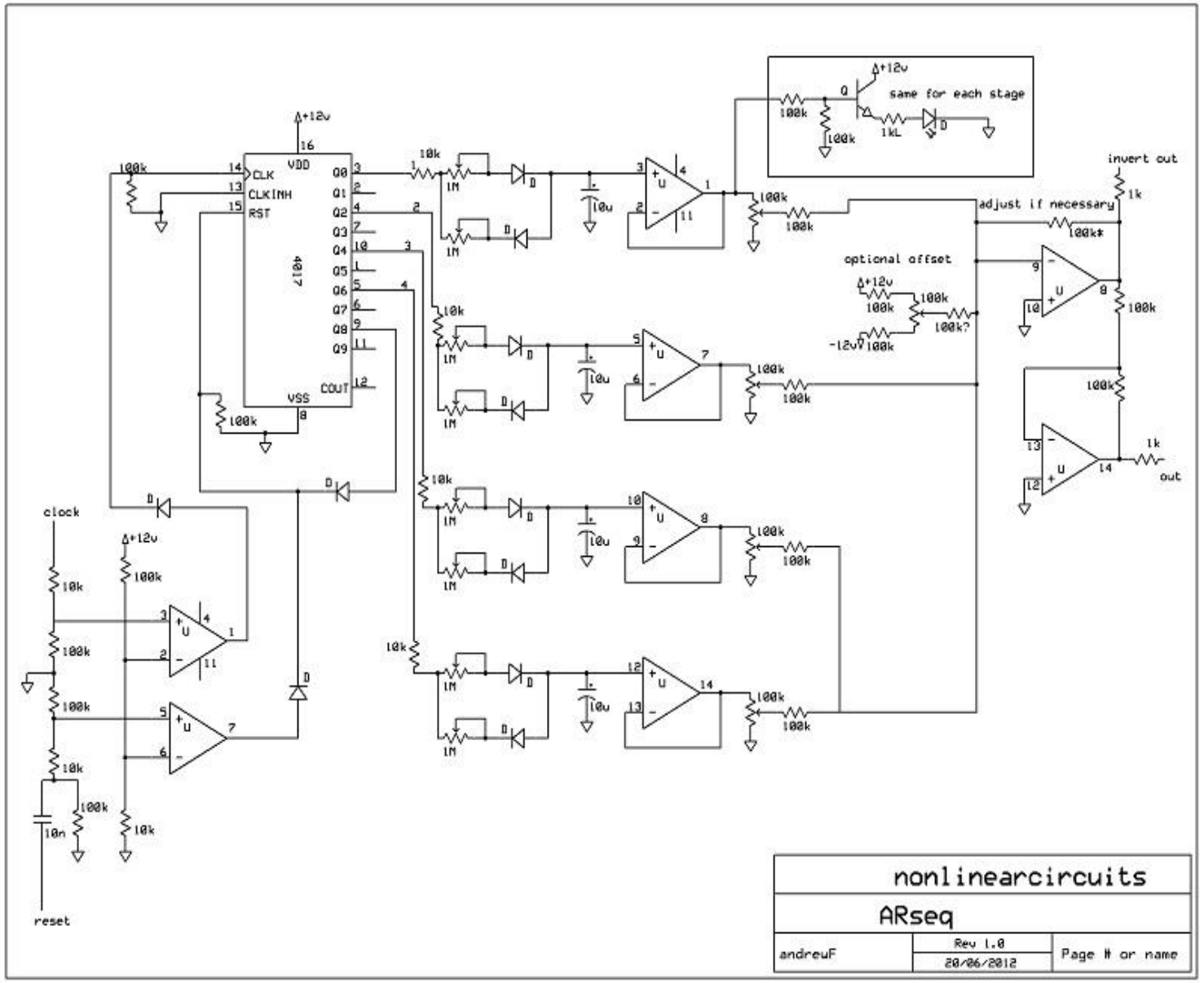
+12v
same for each stage
100k
100k
1kL
D
Q
invert out
1k
adjust if necessary
100k*
optional offset
100k
100k?
-12v
100k
100k
1k
out
VDD
CLK
CLKINH
RST
4017
VSS
COUT
Q0
Q1
Q2
Q3
Q4
Q5
Q6
Q7
Q8
Q9
10k
1M
10u
clock
reset
10n
nonlinearcircuits
ARseq
andreuF
Rev 1.0
20/06/2012
Page # or name

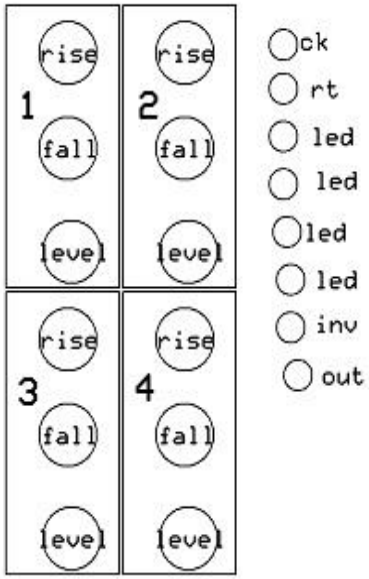
rise
fall
level
1
2
3
4
ck
rt
led
led
led
led
inv
out